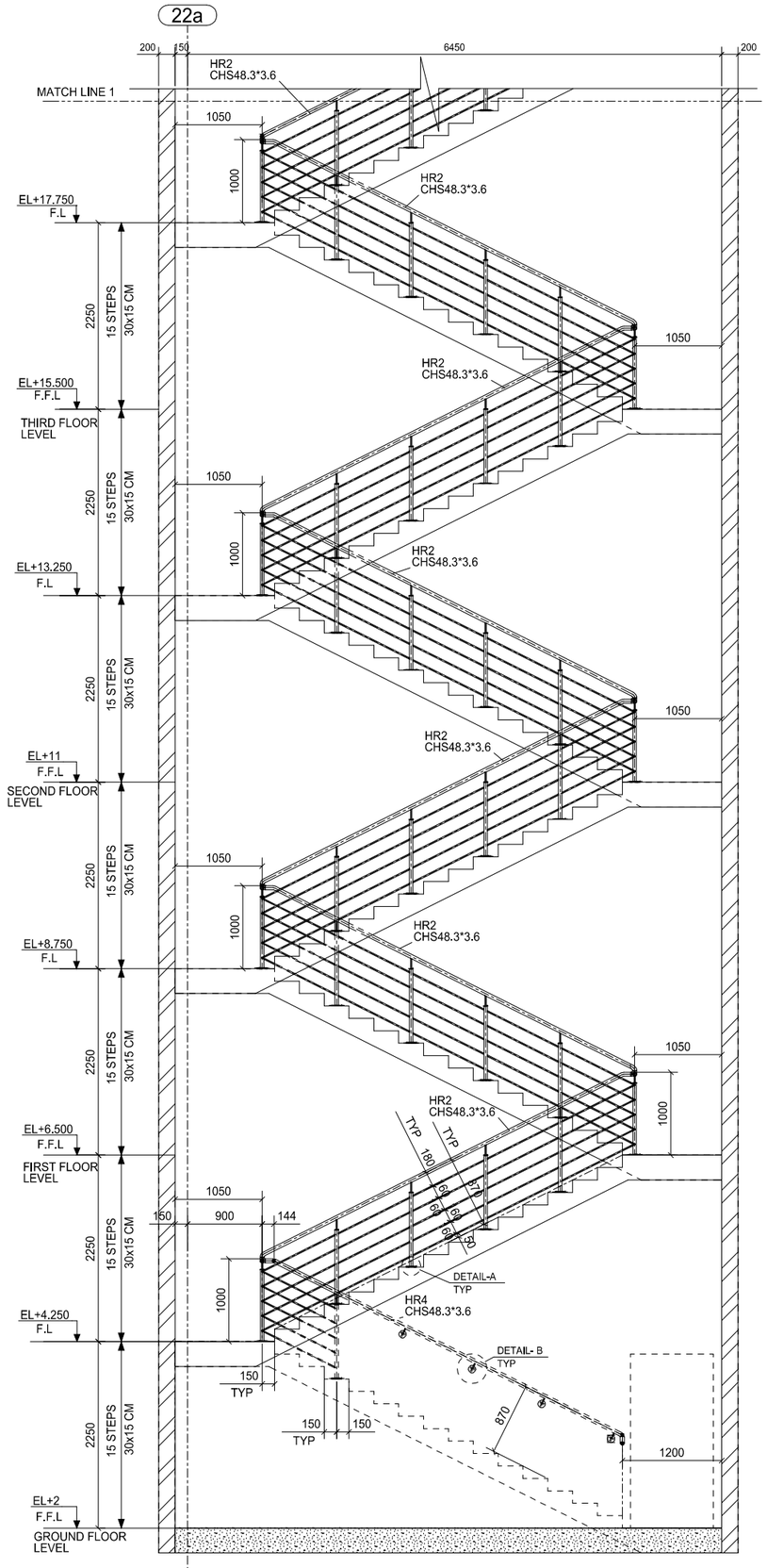

S2/707 SECTION 1:35

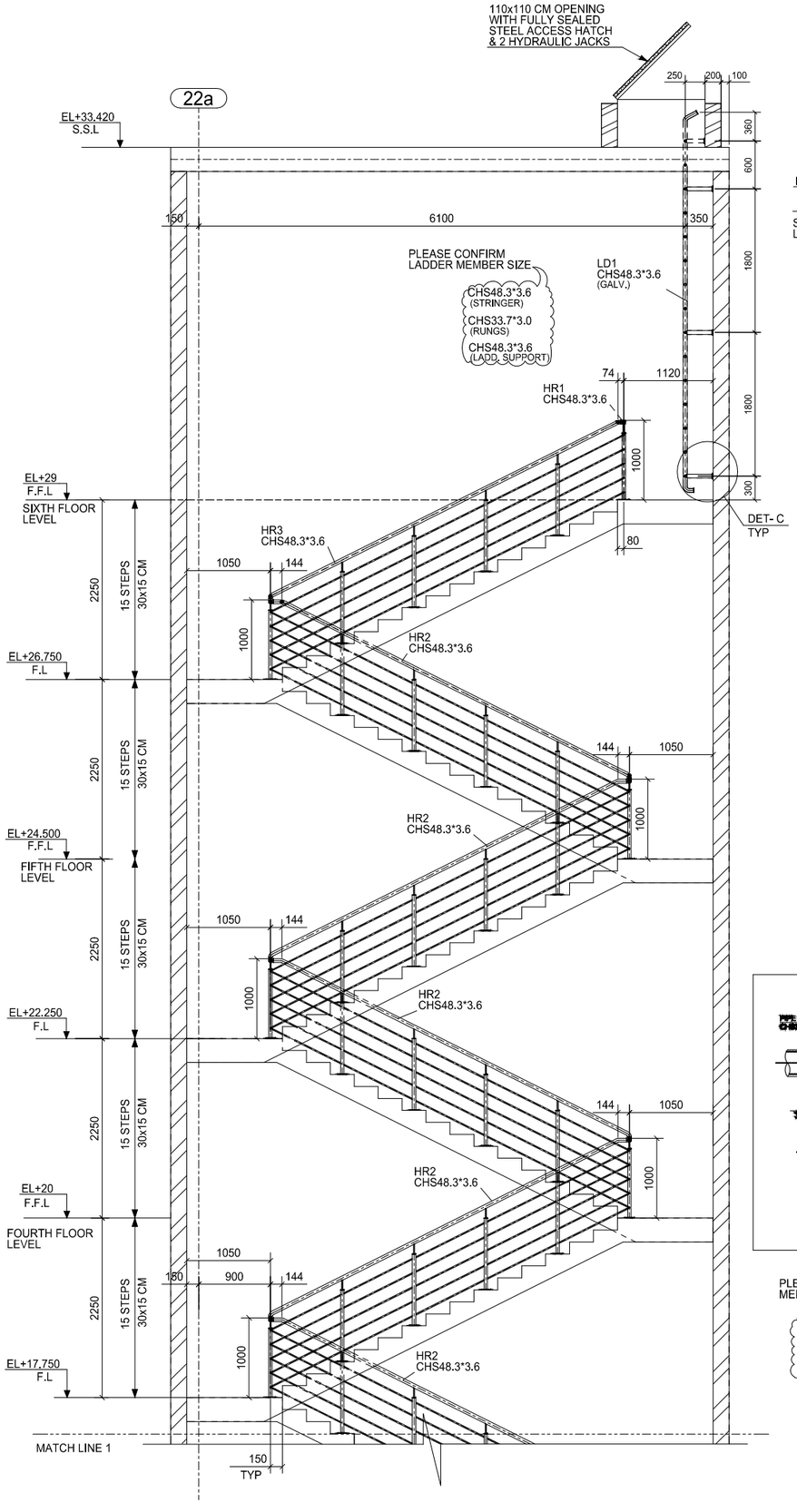

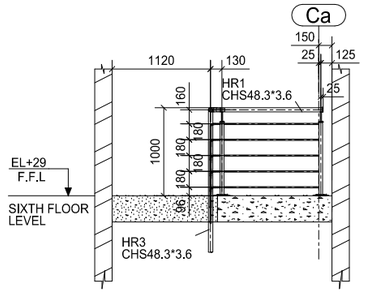

S2/707 SECTION 1:35

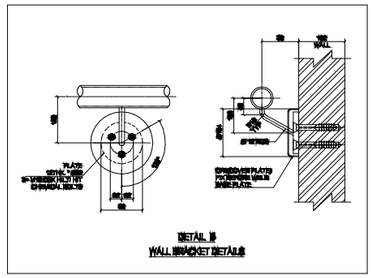

DETAIL B
WALL BRACKET DETAILS

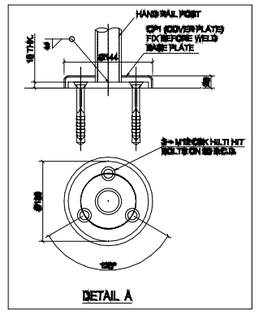

DETAIL A

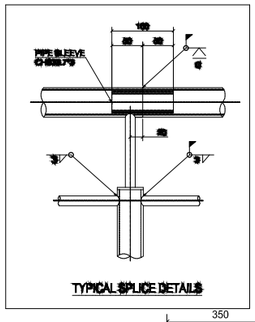

TYPICAL SPLICE DETAILS

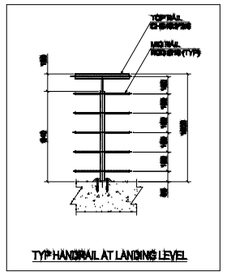

TYP HANDRAIL AT LANDING LEVEL

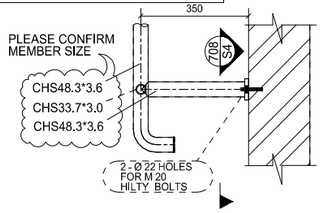

C DETAIL 1:10

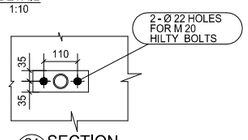

S4/708 SECTION 1:10

NOTES

1. ALL DIMENSIONS ARE IN MILLIMETRES.
2. ALL BOLTS SHALL BE GRADE A325M.
3. ALL WELDS ARE 6mm CONTINUOUS FILLET U.N.O.
4. ALL CIRCULAR HOLLOW SECTIONS ARE ASTM A36/A53 TYPE E OR S, GRADE B.
5. FOR SHS AND RHS SHALL BE ASTM A501, FOR PLATE & ANGLES SHALL BE ASTM A36.

MAKKAH NORTH

NOTES
1. ALL MARKS TO BE PREFIXED WITH CH-S029
2. ALL MATERIAL GRADES AS NOTED.
3. : DENOTES PART TOP & POSITION FOR HARD PUNCH.
4. SURFACE COATING AS PER CLIENT SPECIFICAION.

REFERENCE DRAWINGS FOR ST029

DRAWING TITLE	DRAWING NUMBER	REV
STAIRCASE ENLARGEMENT ST029	A[illegible]	[illegible]
STAIRCASE ENLARGEMENT ST027& STAIRCASE SCHEDULE	A[illegible]	[illegible]
GROUND FLOOR PLAN NOTATIONS ZONE-03	A10[illegible]-N	[illegible]

Rev.	Description	DATE	Approved
A	ISSUED FOR APPROVAL	17-02-12	MA

CLIENT المالك

EMIRATE OF ABU DHABI JUDICIARY DEPARTMENT

DESIGN CONSULTANT الاستشاري : ائتلاف دار العمران / الرمحي

دار العمران
DAR AL-OMRAN
Planners Architects Engineers
Tel. 9626 5004200 Fax.9626556056 E-mail: daralomran@daralomran.com
P.O.Box 182571 amman - 11118 - jordan

RAMAHI Engineering Consultancy
Abu-Dhabi, U.A.E., P.box 71852 Fax 6327225

PROJECT MANAGER

MORGANTI
INTERNATIONAL DIVISION
UNITED ARAB EMIRATES

THE MORGANTI GROUP, INC.
100 Mill Plain Road, Danbury, CT, USA
Tel: (203) 743-2675 Fax: (203) 830-4477

Main Contractor

GHANTOOT TRANSPORT & Gen.Cont.Est. (Building Division)
NEAR MAIN BUS TERMINAL
MUROOR ROAD-ABU DHABI
UNITED ARAB EMIRATES
E-mail:gbd@ghantootgroup.ae
Web site:www.ghantootgroup.com
TELEPHONE: 02-6414151
FAX: 02-6412010

SUBCONTRACTOR:
RASANA ENGINEERING IND. CO. LTD.
TEL: 06-5360890 FAX: 06-5360891
P.O. Box 992, Sharjah, UAE

PROJECT TITLE اسم المشروع
ABU DHABI COURTHOUSE
COMPLEX PROJECT

Drawing Title
STAIR CASE S029 (BLDG# 1)
SECTIONS

Original Scale	Drawn	Ckecked	Approved	Size
	SCAD	SCAD	MA	A1
	Date: 10.02.2012	Date: 17.02.2012	Date: 17.02.2012	

DRAWING No. **GTGC-J039-RAS-STR-708** REV. A

Tekla structures